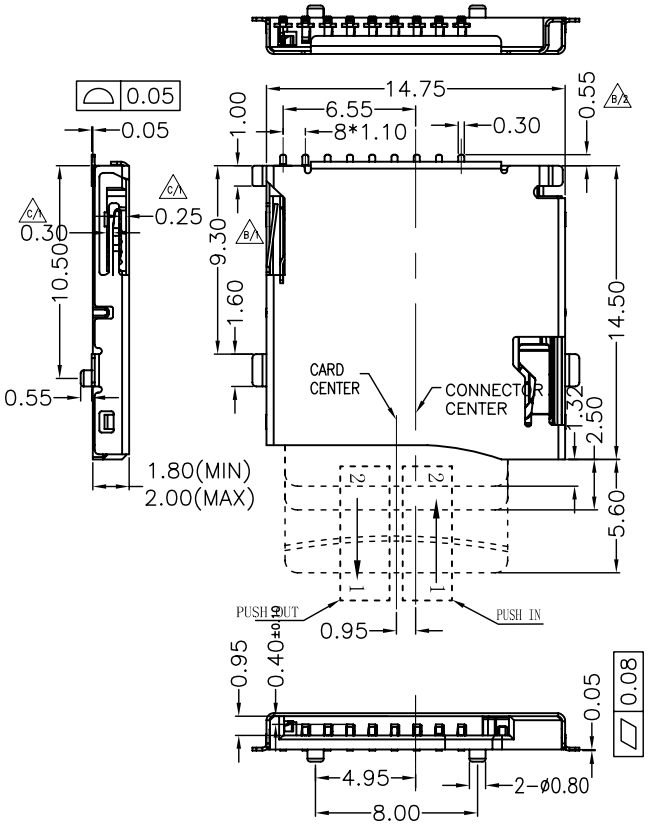

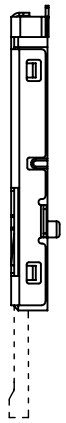

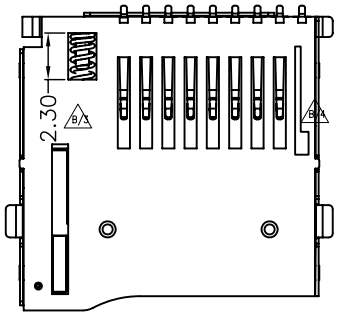

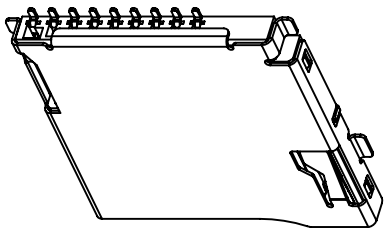

NOTES:

1.MATERIAL:
- HOUSING: HIGH TEMPERATURE THERMOPLASTIC UL94V_0,COLOR:BLACK.
- CONTACT: COPPER ALLOYS.
- COVER: COPPER ALLOYS OR STEEL.

2.PLATING:
- UNDERPLATE: NICKEL.
- CONTACT AREA: GOLD OVER NICKEL.
- SOLDER AREA: TIN OVER NICKEL.

3.MULTIMEDIA CARD COMPATIBLE

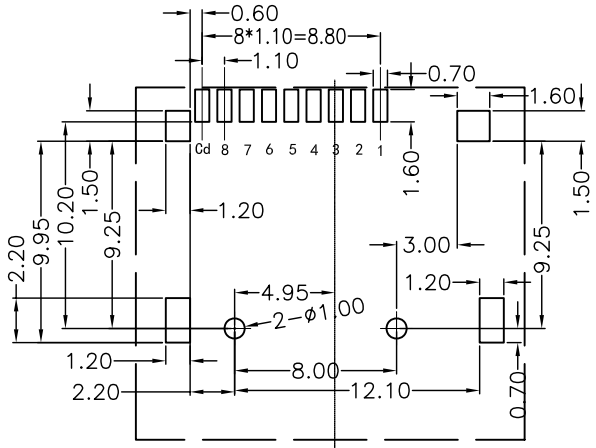

RECOMMENDED P.C.B HOLE LAYOUT
COMPONENT SIDE VIEW(TOLERANCE: +/-0.05)

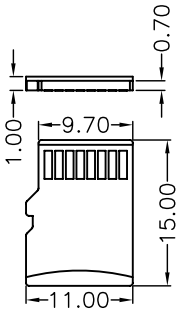

T-Flash

PIN NO.	NAME	YTPE	DESCRIPTION
1	DAT2	I/O/PP	DATE LINE(BIT2)
2	CD/DAT3	I/O/PP	CARD DETECT DATE LIN(BIT3)
3	CMD	PP	COMMAND RESPONSE
4	VDD	S	SUPPLY VOLTAGE
5	CLX	I	CLOCK
6	VSS	S	SUPPLY VOLTAGE GROUND
7	DAT0	I/O/PP	DATE LINE(BIT0)
8	DAT1	I/O/PP	DATE LINE(DIT1)

深圳市华宇创精密电子有限公司

TOLERANCE: X.X ±0.30, X.XX ±0.25, X.XXX ±0.15, X.° ±2°, X.X° ±0.5°	DRAWED BY : 陈一鸣	DATE : 2014-02-23	PART NAME: TF PUSH外焊
	CHECKED BY: 马跃	DATE : 2014-02-23	PART NO. HYC77-TF09-200
			MOLD NO.
UNIT: mm [inch]	APPROVED BY: 邱国夷	DATE : 2014-02-23	DRAW NO: HYC-TF20162319
SCALE:1:1	SIZE: A4		SHEET NO. 1 OF 1

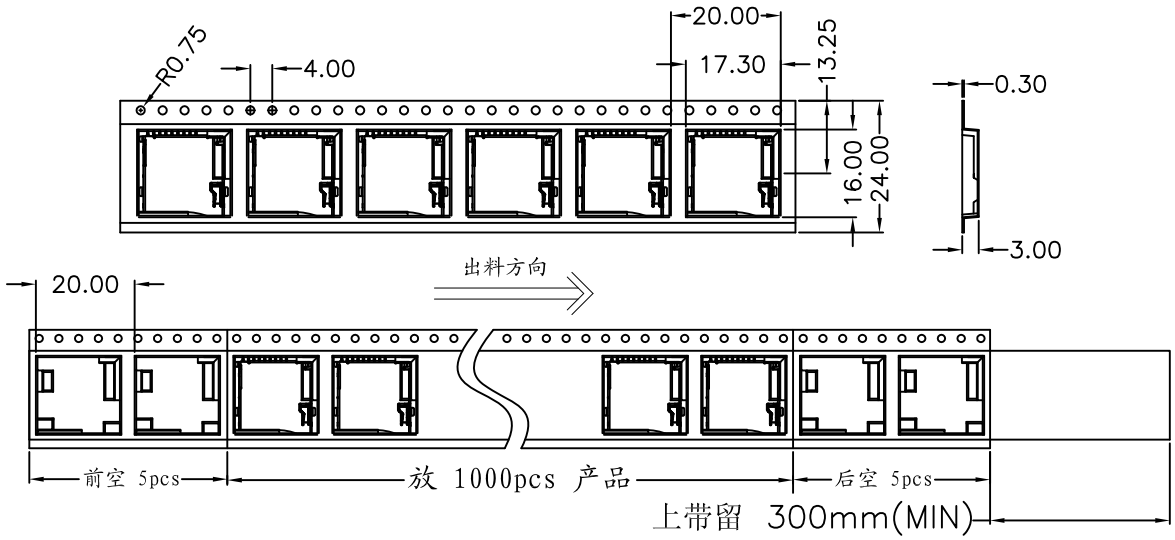

NO. 1

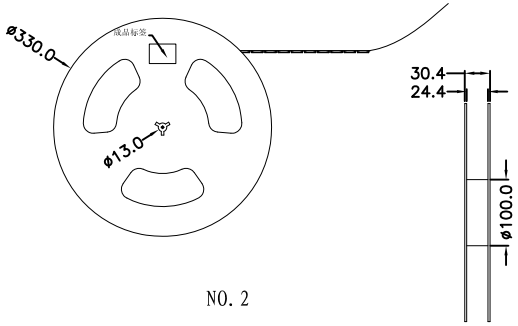

NO. 2

1. 材质要求:
   1.1 纸箱的材质为K=K;外形尺寸为34*34*38.5;
   1.2 卷盘的材质为PS,卷盘的外形尺寸为∅330*30.4;
   1.3 卷带的材质为PS,卷带的外形尺寸为20200*24.00*3.0mm;
2. 包装方式:
   2.1 将卷带放入包装机后，前空5PCS，后放产品1000PCS，再后空5PCS;上带留300MM长度。
   2.2 将包装好的产品从包装机上取下并包装好,贴上内盘标签;
   2.3 把累叠好的12盘叠放入纸箱中共计12Kset，上下放纸板，纸箱四个角塞护角纸;
   2.4 把包装好的成品打包封箱，并在纸箱外贴上标签

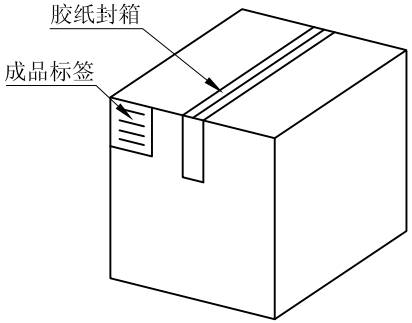

纸箱规格：340*340*385

NO. 4

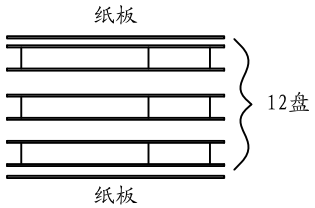

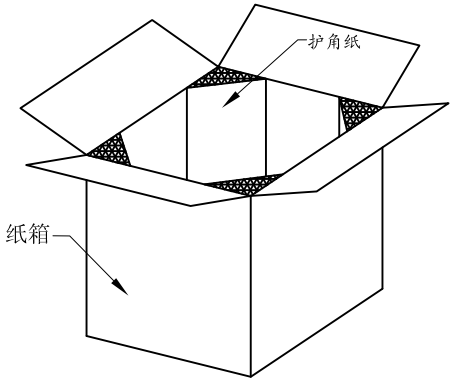

NO. 3

深圳市华宇创精密电子有限公司			
TOLERANCE: X.X ±0.30 X.XX ±0.25 X.XXX ±0.15 X.° ±2° X.X° ±0.5°	DRAWED BY : 陈一鸣	DATE : 2014-02-23	PART NAME:
	CHECKED BY: 马跃	DATE : 2014-02-23	PART NO. / MOLD NO.
UNIT: mm [inch]	APPROVED BY: 邱国夷	DATE : 2014-02-23	DRAW NO:
SCALE:1:1 SIZE: A4			SHEET NO. 1 OF 1